ICSV3003
SALT AND SPREADER MODULE

Revised January 20, 2016

VICKERS

C.I.E. CHAMPION INDUSTRIAL EQUIPMENT
2855 Marleau Avenue, Suite A, Cornwall, Ontario K6H 7B6
Tel: 613 938-2900 Fax: 613 938-8219
www.cie-eic.com

ICSV3003... Quality at low price

The ICSV3003 valve has been manufactured in order to offer to spreader users a proportional electrohydraulic control that is precise and reliable and is at a very affordable price. Its durability, simplicity and size make it a very desirable valve.

- Works with variable or fixed pumps
- Safety relief valve adjusted at 1500 PSI
- Flexible operation
- SAE type connecting ports (O Ring Boss)
- Anodised aluminium distribution manifold
- Allows for manual over-ride if needed
- Pressure compensated flow on conveyor
- Internal plug option for Series circuit
- Integrated Load Sensing output signal
- Load Sensing bleed off signal

The **ICSV3003** answers the expectations of those users who need a proportional and reliable spreading system using a compact and lightweight distribution manifold with low maintenance and repair costs.

The following are some of the manifold features:

Integrated Safety Relief Valve

A Safety Relief Valve is integrated in the manifold. The Safety Relief Valve limits the max pressure of the circuit by bypassing the fluid to the tank when this pressure is reached.

Use with a fixed pump

When there is no electric signal transmitted to the ICSV3003, a valve will direct the oil coming from the pump to the tank. When electric signals are supplied to the conveyor, spinner and prewet coils, a flow, proportional to the signal will be transmitted to the actuators. The pressure needed to move the actuators is then transmitted to the valve. This valve compares the load pressure to the inlet pressure. When there is a difference between the two pressures, the valve by-pass the excess oil to the tank. This is the standard setting.

Use with a pressure compensated variable pump

Some users will prefer to use a variable pump that will only supply oil as needed. Also, this type of pump will not send too much oil in the circuit when the engine is at full rpm. For the setting with the variable pump, all you have to do is interchange two orifices in the manifold.

Use with a pressure compensated and load sensing variable pump

This type of pump works and uses the same setting as the previous pump. The only difference is a pressure signal that is transmitted to the pump so the highest max pressure of the actuators at the pump outlet will not be exceeded. The main characteristic of this system is to limit loss of energy in heat and to ease the engine start. This system is the most efficient and will save on fuel and the temperature of the oil will be lower.

Use of the bleed of signal orifice for a pressure compensated and load sensing pump.

If a user wants to block the conveyor or spinners or pump outlet (in the summer for example), an orifice is provided to ensure a non creation of a pressure build-up in the load sensing cavity. If an orifice has not been provided, a load sensing signal might be created due to the proportional valve leakage even if they are not energised. This orifice sinks the small amount of leakage and assures no outgoing signal to the load sensing pump line.

In a normal use, when the pump, the conveyor, spinner and prewet are connected, the load sensing pump of the user can already be equipped with a bleed down load sensing signal orifice. In this case the pump cannot rise in pressure so you will have to replace the valve orifice with a plug. (You will find the instructions, further in this document.)

Use of a plug (power beyond plug) to connect valves in series

Some users have to use valves in series to reduce the cost and the dimensions of the system. In order to be protected, it is important to keep the access free from the safety valve to the tank.

It is important to separate the line of the safety valve outlet from the line of the "T" or "PB" port. The standard manifold already has a plug to separate those two lines. An outside line is necessary for the drainage of the safety valve to the tank. A second line could allow the transmission of the fluid from "PB" to supply the second circuit.

For a system without a secondary circuit, you use only one line: the one going to the tank. In that case, you must take the isolation plug out of “T1”. You will find this in the rest of the document and more info on those systems.

When you purchase an ICSV3003, you can also say that you have purchased Quality!

Connecting the valve in series

When you buy an ICSV3003, the option to connect the valve in series is already included in the manifold. It is important to take the isolation plug out from inside T1 when you receive the manifold if your system does not require a layout in series.

We will first specify the differences between the standard layout and the layout in series.

A standard layout is a layout that will supply the ICSV3003 manifold with a flow of oil. The excess of that flow will be automatically sent back to the tank. (See figure 1). **This layout is possible only if the isolation plug is taken out of the manifold in "T1" port.** (See the section Procedure to take the isolation plug out of the manifold, for more details)

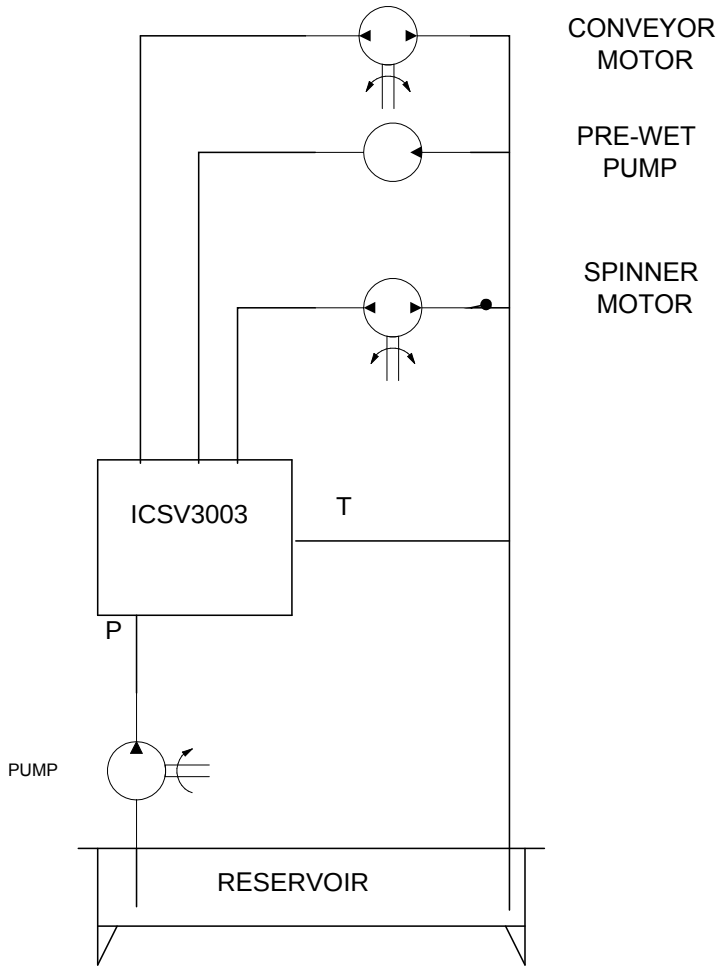

FIGURE 1

C.I.E. CHAMPION INDUSTRIAL EQUIPMENT
2855 Marleau Avenue, Suite A, Cornwall, Ontario K6H 7B6
Tel: 613 938-2900 Fax: 613 938-8219
www.cie-eic.com

A layout in series must allow the excess oil to be retransferred to the secondary circuit. At the same time, there must be a protection in case of overpressure. The relief valve integrated in the manifold allows for this kind of protection. (See figure 2)

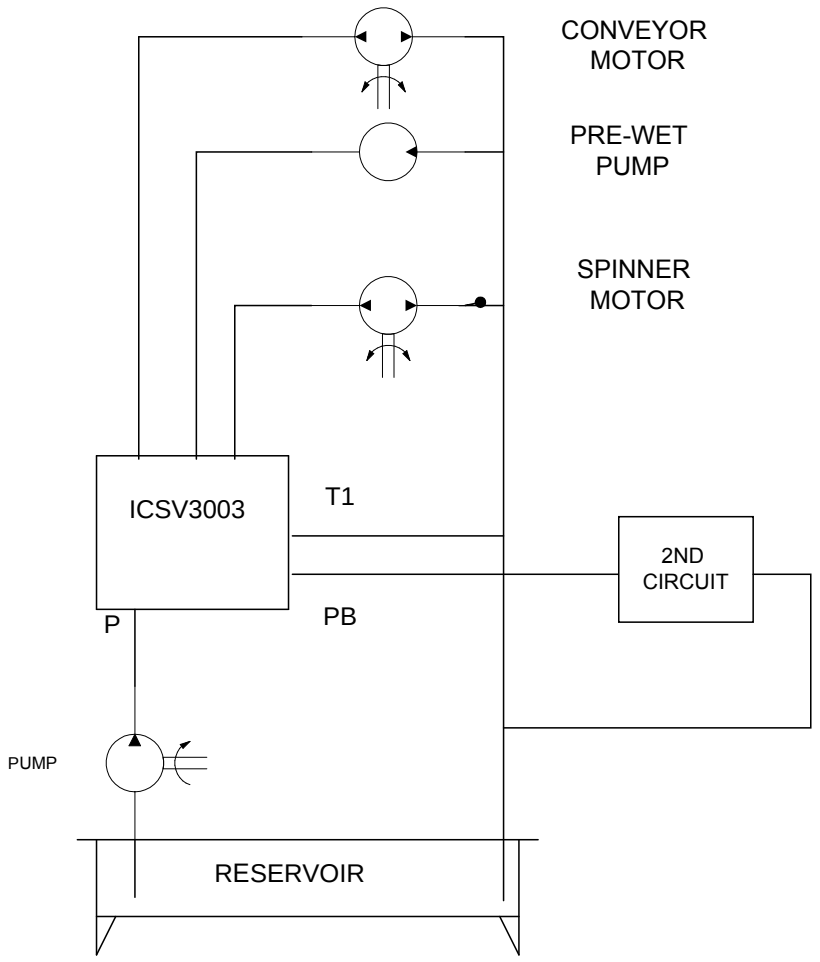

FIGURE 2

We can see that for a layout in series, if it is necessary to use a second line when you use a standard circuit, you can remove plug inside “T1” to join line "PB" with line "T1".

Important Notice: In the case of PB where you would leave the plug inside, you will be required to use 2 lines: one at "T1" and the other at "PB" and they must join to tank.

Procedure to take the isolation plug out of the manifold if you are not using PB and use for a standard layout (This plug is not usually installed)

The first thing you have to do is to find the plug that is located under the spreader manifold on the same side as the fixing holes. When you have found it, take the upper plug off to have access to the isolation plug. (See figure 3)

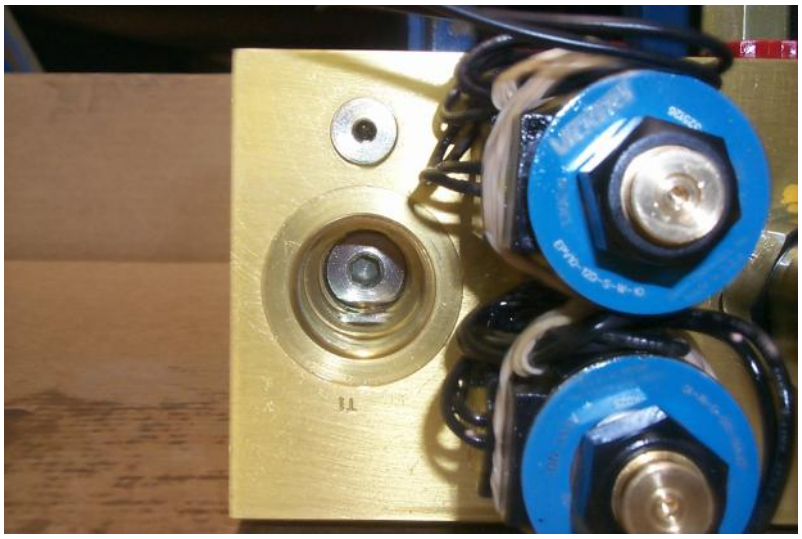

For Spinner

FIGURE 3

For liquid

After taking the upper plug off, unscrew the isolation plug. (See figure 4).

The isolation plug inside must be installed if you are using PB function. Only remove if you are using valve in standard layout.

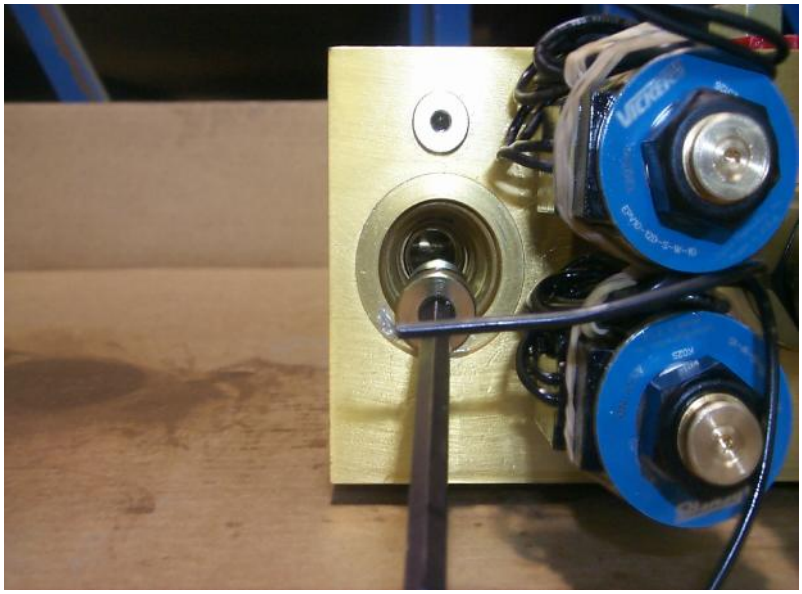

FIGURE 4

Procedure to change the setup from a fixed pump to a variable pump.

The manifold has a standard layout to be used with a fixed pump setup. However, you can change the layout of the manifold and use it with a pressure compensated variable pump (with or without the load sensing option).

Here is how to do it. You must interchange two plugs inside the manifold. The first plug is located in position # 8 under the construction plug # 7 (see figure 5 and 6).

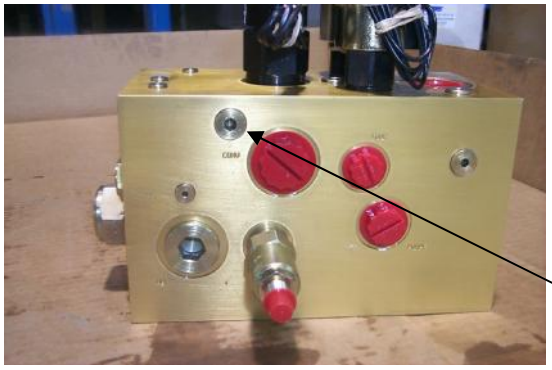

FIGURE 5

8

7

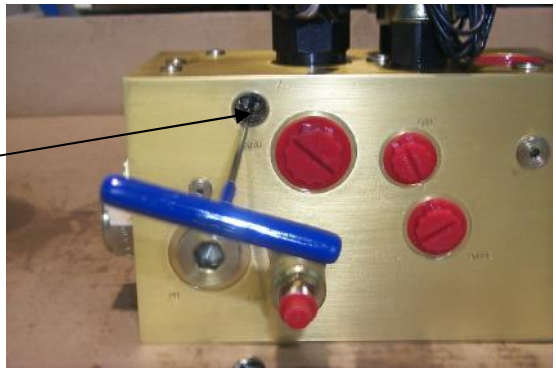

FIGURE 6

With a 1/4" wrench you can take the construction plug #7 out. You then have access to the plug position # 8. Using a 1/8" wrench, unscrew and take the plug out. You will see that there is no orifice in the center of the plug.

After that, you must take the plugs # 7 and # 14 out. (see figure # 7 and 8)

FIGURE 7

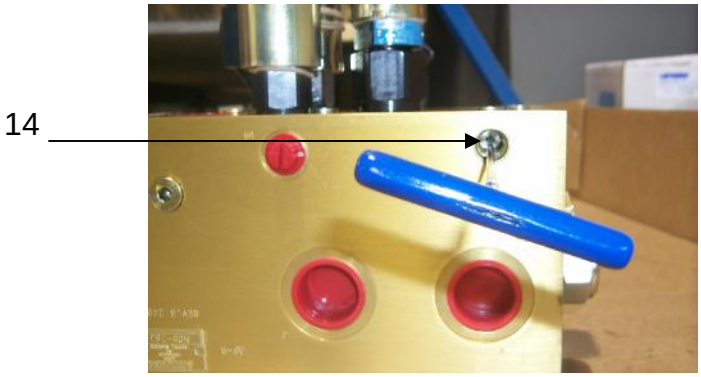

FIGURE 8

With a 1/4" wrench you can take the construction plug #7 out. You then have access to the plug position # 14. Using a 1/8" wrench, unscrew and take the plug out. You will see that this time there is an orifice in the center of the plug.

Now, you must put the plug # 8 (fig. 5) where the orifice plug # 14 (fig. 8) was and put plug # 14 where plug# 8 was. Place both construction plugs # 7 back in place. The modification is done.

If you have the load sensing option, you will have to install a line from the "LS" port on the manifold to the pump.

Procedure to get off the bleed off load signal.

The standard block comes with the load sensing bleed off orifice. To remove it, you just have to replace the orifice # 10 by a plug. You are going to find the orifice under the plug # 7 (See figure 7 and 8).

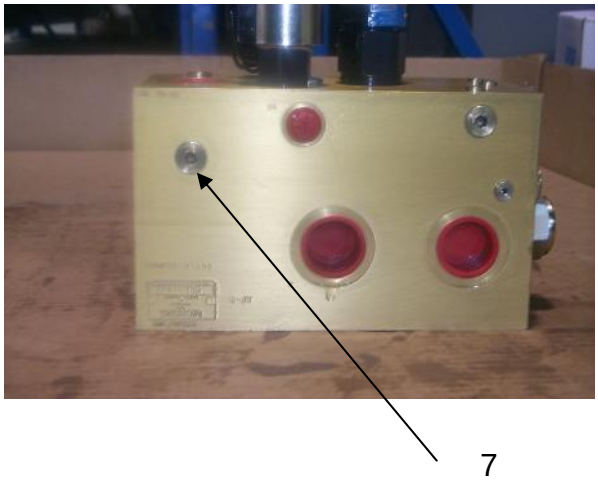

FIGURE 7

10

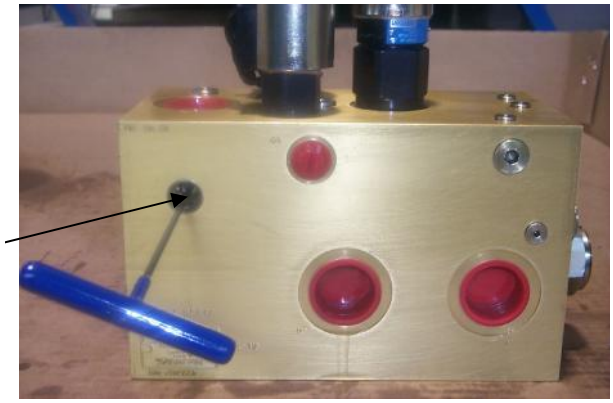

FIGURE 8

Technical Information

Data

Flow Range	0-150 lpm (0-30 USgpm)
Max Pressure	200 bars (3000 psi)
Pressure Adjustment Range	17 to 240 bars (250 to 3500psi)
Operating Temperature	.-20° to 110°C (-4° to 150°F)
Viscosity Range	13 to 500 cSt (70 to 2300 SUS)
Electrical Power required	
On each coil (full flow)	1.4 amps at 12 VDC
Frequency Range recommended	100 to 150 Hz
Electrical Connections	Flying leads or DIN connectors
Manual override	Screw type on conveyor
Recommended Target Cleanliness Level.*	17/15/12
Ports P, T et T1	SAE 16 1 5/16-12
Ports AUGER et PB	SAE 12 1 3/16-12
Ports SPINNER	SAE 8 3/4-16
Ports "GA"	SAE 6 9/16-18
Ports LS	SAE 4
Weight	5.9 kg (13 lbs)

Fluids

In order to have a satisfactory life of hydraulic components. You must use the appropriate fluid for your system. Components wear will be affected by elements such as fluid type, additives in the fluid, fluid viscosity, and cleanliness level during use.

More info regarding Fluid and Contamination Control is available in Vickers publication # 561 "Vickers Guide to Systemic Contamination Control".

Additional Information:

Champion Industrial Equipment
2855 Marleau Avenue, Suite A
Cornwall, ON K6H 7B6

Tel : 613-938-2900
Fax 613-938-8219